March 8th, 1972

Conversion of old YBA-1 with 5AR4 rectifier and 7027A output tubes to solid state rectifier and 6CA7 output tubes:

The old circuit (1) fits on old circuit (2) at points A B C D and E to convert the rectifier. It may be possible to fit some of the PH204's right on the old 5AR4 socket as terminal points, or, solder in a separate terminal lug strip.

The 6CA7 and the 7027A have the same tube basing except that you will have to connect G3 pin 1 to pin 8 externally for the 6CA7. We suggest also a 1.5K ½W resistor in series with the G1 on pin 5 of the 6CA7 to prevent oscillation. We suggest you reduce R30 from 56K to 47K to make the no signal grid bias voltage - 38V.

Except for the transformer voltages, circuit 3 shows the amplifier converted to 6CA7's. The addition of the shock mount rubber feet will insure longer tube life.

We have included the latest schematic for reference but we do not recommend that you delete the choke in your conversion.

Yours truly,
YORKVILLE SOUND LIMITED

P. A. Hallam, P. Eng

PAH:vc

6

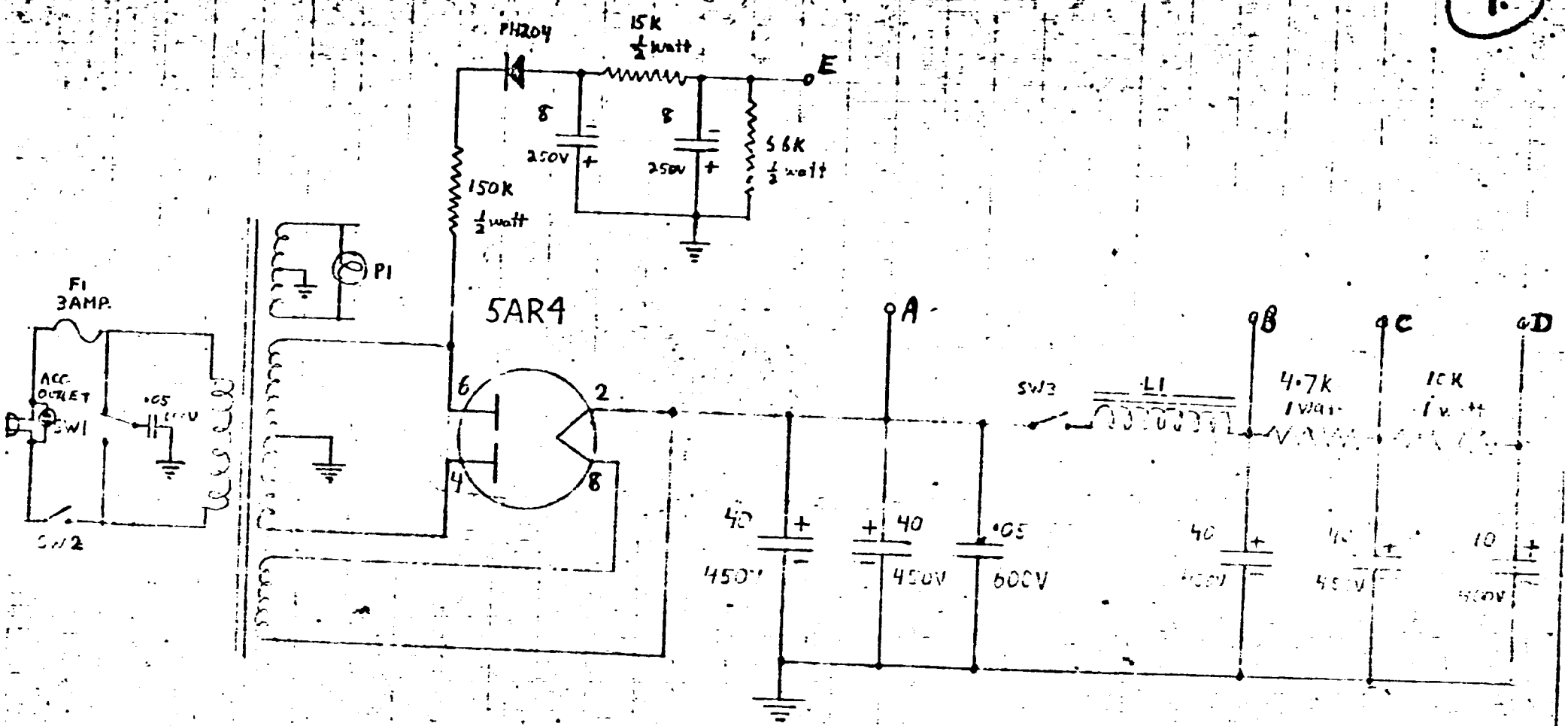

YBA-1 Power Supply Using Tube Rectifier

April - 1966

YORKVILLE SOUND LTD
TORONTO CAN.

OLD MODEL

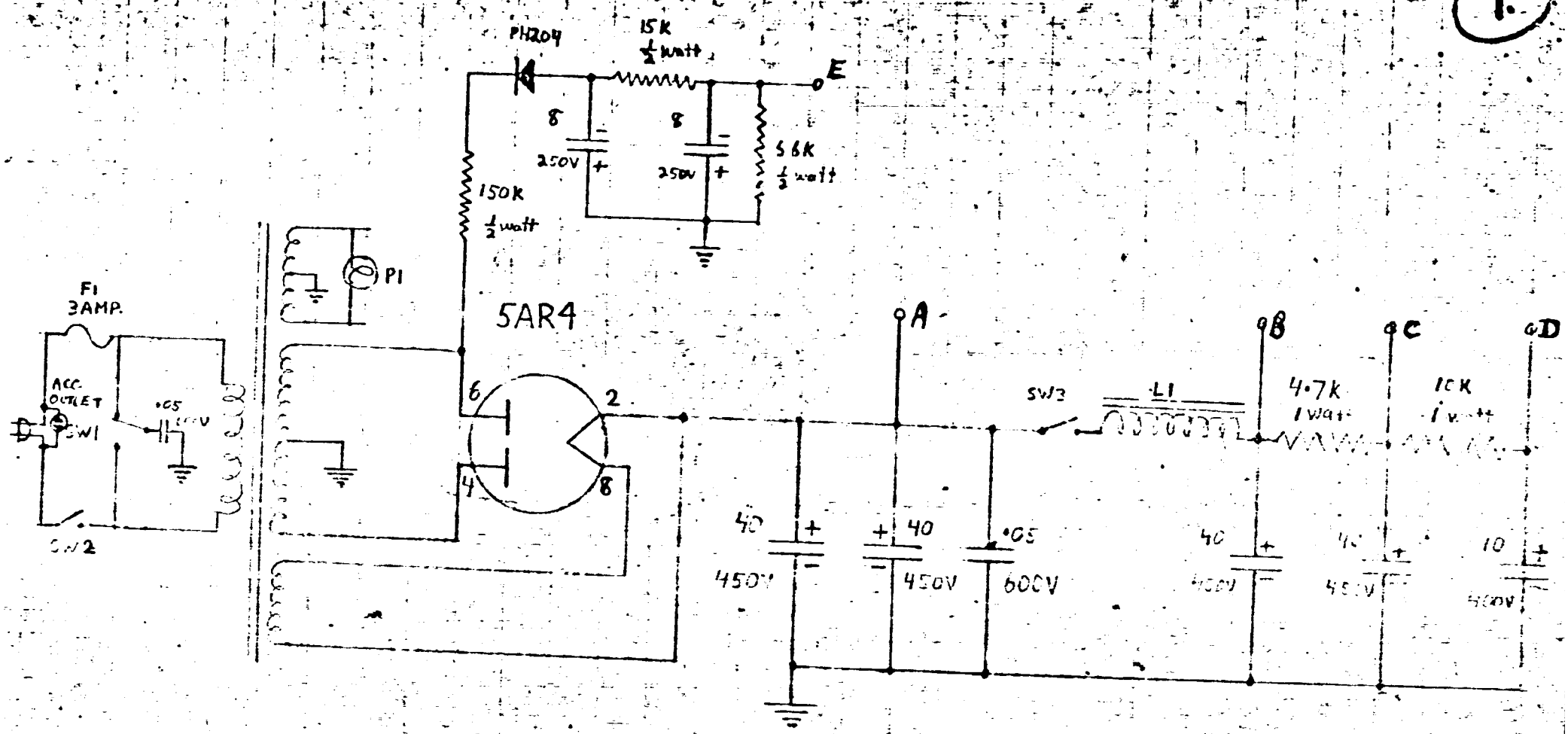

YBA-1 Power Supply Using Tube Rectifier

April - 1966

YORKVILLE SOUND LTD
TORONTO CAN.

OLD MODEL

ORIGINAL VERSION

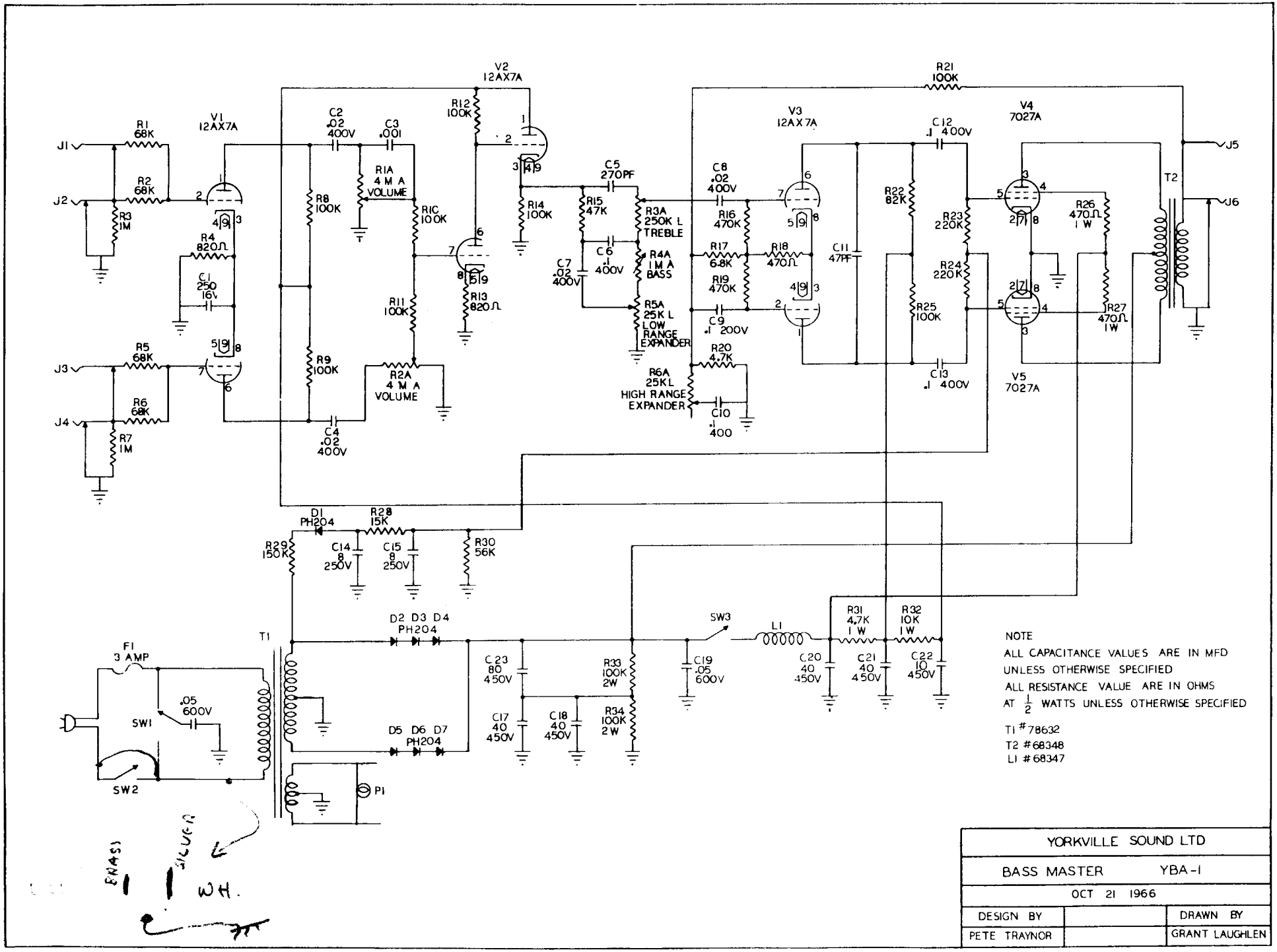

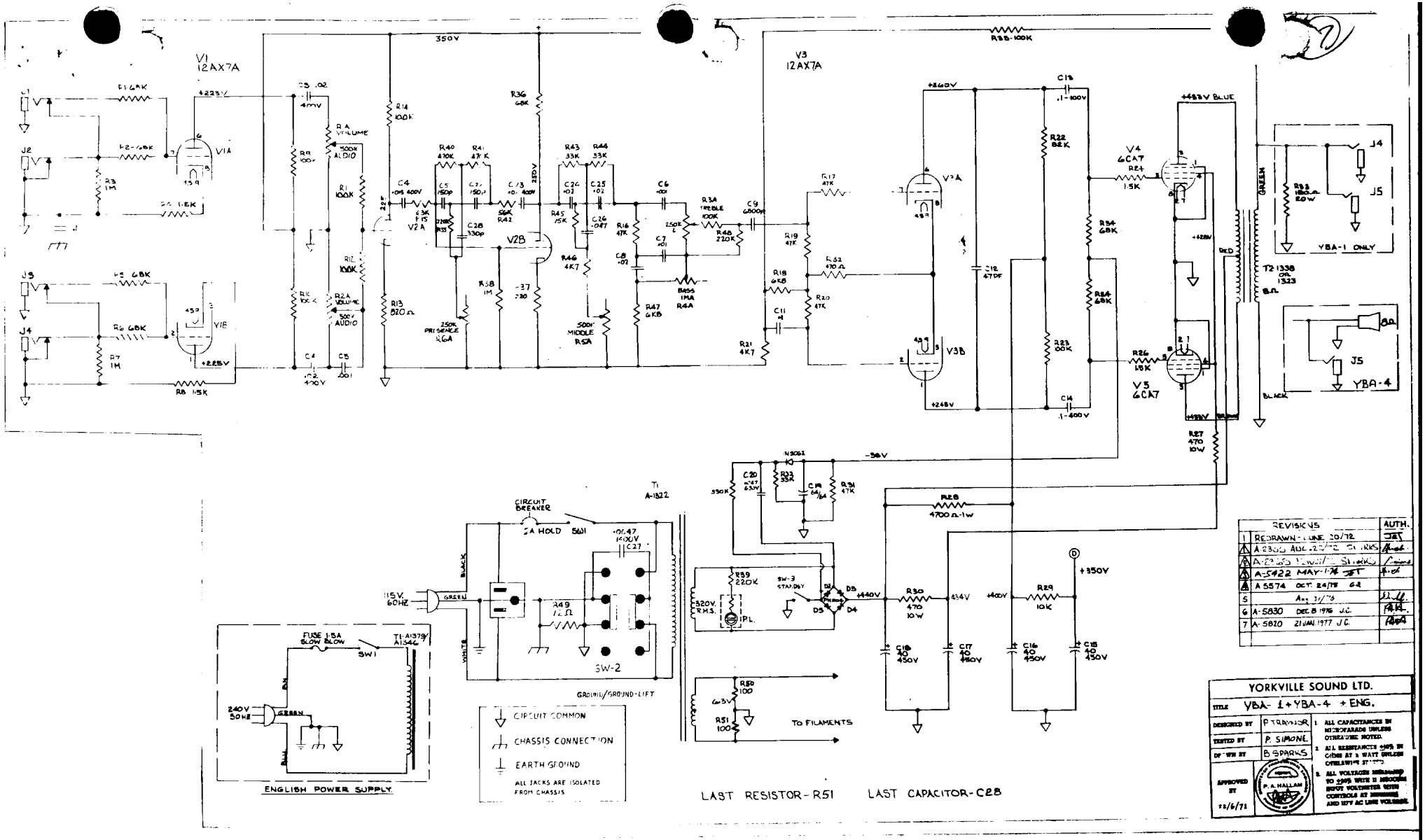

	REVISIONS		AUTH.
1	REDRAWN - JUNE 20/72		JET
4	A 2305 AUG 22/72	SPARKS	
4	A-2305	SPARKS	
4	A-5422 MAY-1/74	JET	
4	A 5574 OCT. 24/75	G.E.	
5	Aug 31/76		
6	A-5830 DEC. 8 1976	J.C.	
7	A-5810 21 JAN. 1977	J.C.	

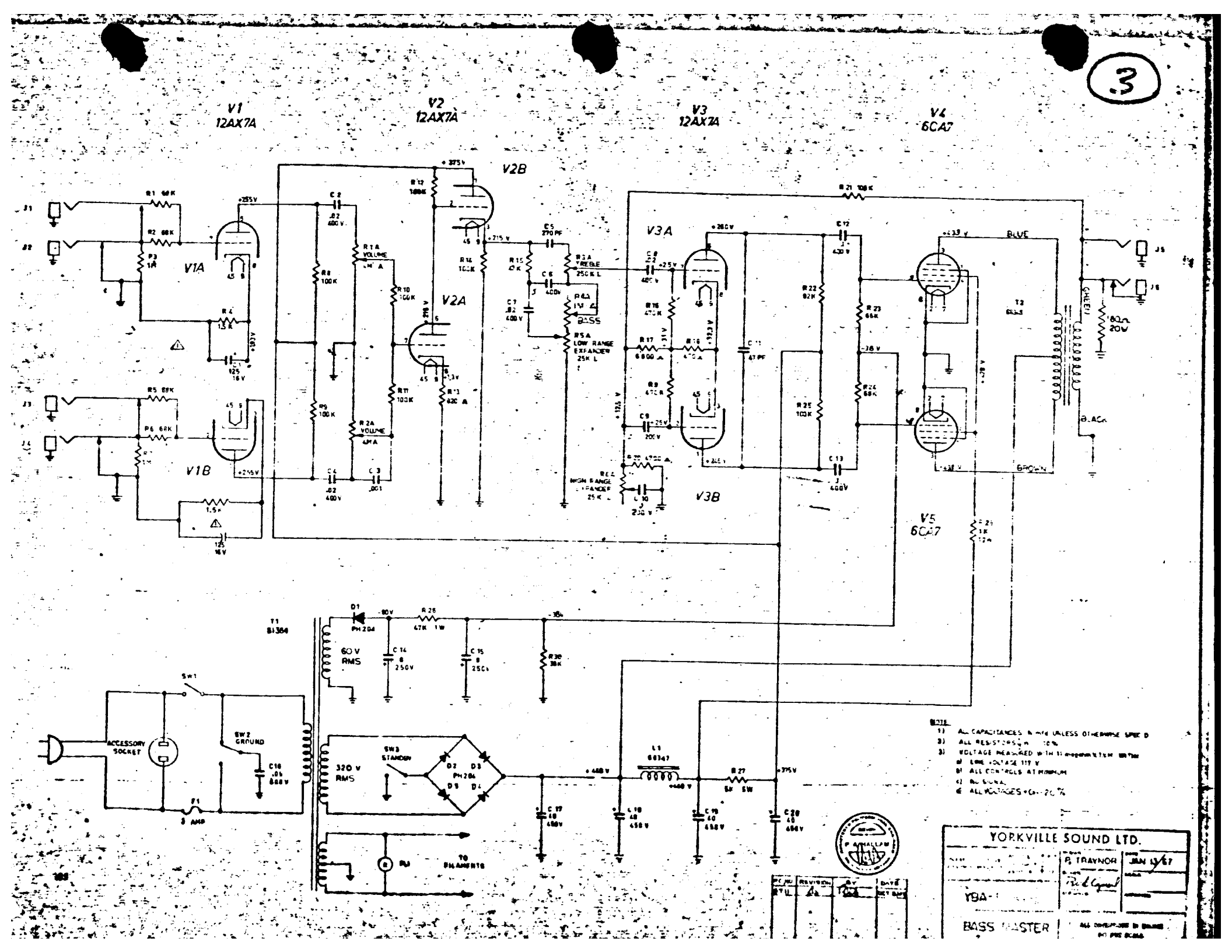
V1
12AX7A
V2
12AX7A
V3
12AX7A
V4
6CA7
V5
6CA7
V1A
V1B
V2A
V2B
V3A
V3B
R1 68K
R2 68K
R3 1M
R4 1.5K
R5 68K
R6 68K
R7 1K
R8 100K
R9 100K
R10 100K
R11 100K
R12 100K
R13 820
R14 100K
R15 47K
R16 470K
R17 6800
R18 470K
R19 470K
R20 470K
R21 100K
R22 82K
R23 68K
R24 68K
R25 100K
R26 68K
R27 5W 5W
R28 47K 1W
R29 1K 12W
R30 38K
R31 470K
R1A VOLUME 1M A
R2A VOLUME 1M A
R3A TREBLE 250K L
R4A 1M A BASS
R5A LOW RANGE EXPANDER 25K L
R6A HIGH RANGE EXPANDER 25K
C1 125 16V
C2 .02 400V
C3 .001
C4 .02 400V
C5 270 PF
C6 400V
C7 .02 400V
C8 .02 400V
C9 200V
C10 250V
C11 47 PF
C12 400V
C13 400V
C14 8 250V
C15 8 250V
C16 .05 600V
C17 40 450V
C18 40 450V
C19 40 450V
C20 40 450V
D1 PH204
D2 D3 D4 D5 PH204
T1 81364
60V RMS
320V RMS
SW1
SW2 GROUND
SW3 STANDBY
ACCESSORY SOCKET
F1 3 AMP
L1 68347
PM
TO FILAMENTS
T2 6G45
BLUE
BROWN
BLACK
SHIELD
J1
J2
J3
J4
J5
J6
8Ω 20W
+375V
+215V
+255V
+280V
+339V
+180V
+125V
+25V
-80V
-36V
+440V
YORKVILLE SOUND LTD.
R. TRAYNOR
JAN 15/67
YBA-1
BASS MASTER

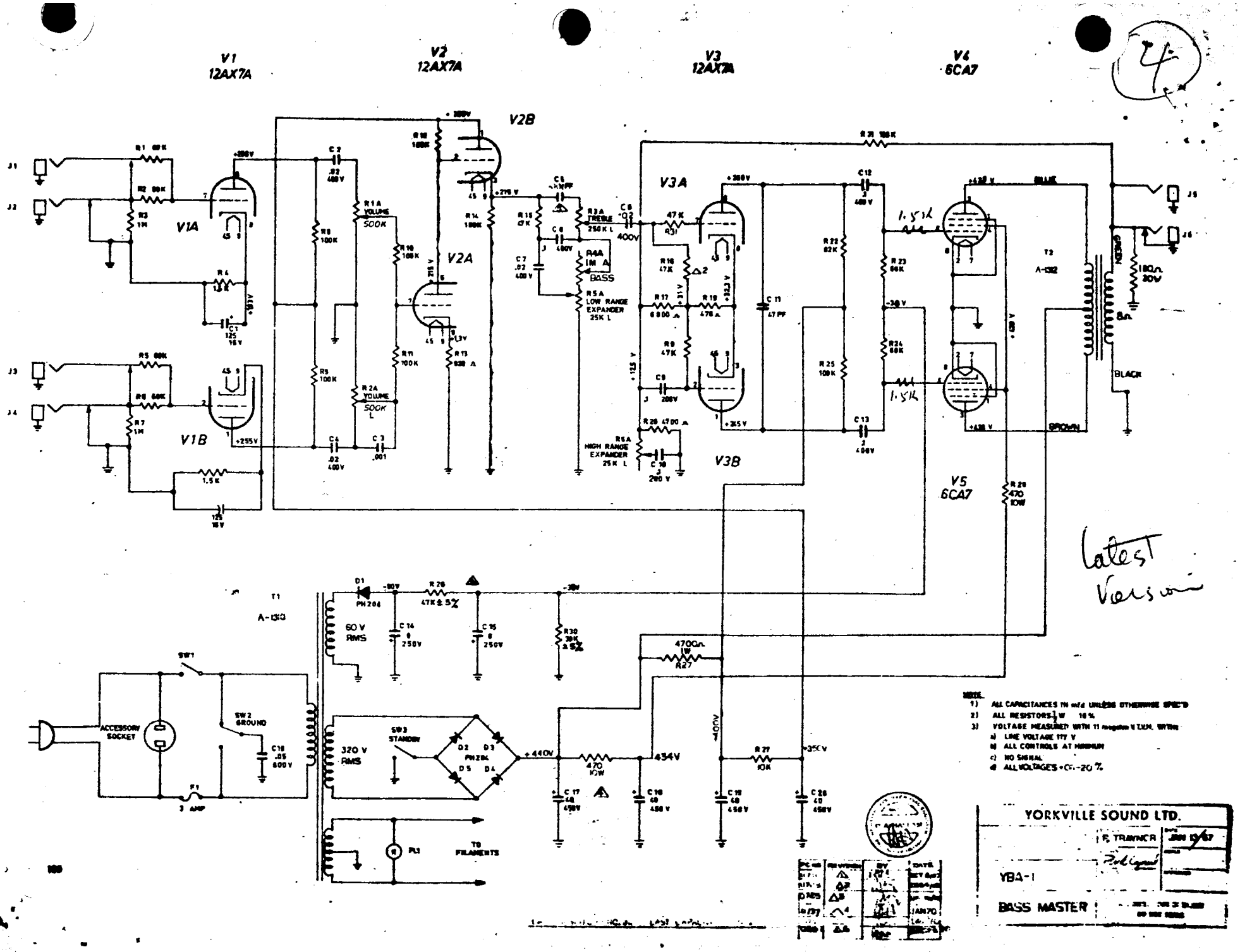
V1
12AX7A
V2
12AX7A
V3
12AX7A
V4
6CA7
V1A
V1B
V2A
V2B
V3A
V3B
V5
6CA7
R1A VOLUME 500K
R2A VOLUME 500K L
R4A TREBLE 250K L
R4A IN A BASS
R5A LOW RANGE EXPANDER 25K L
R5A HIGH RANGE EXPANDER 25K L
T2 A-132
T1 A-130
BLUE
GREEN
BROWN
BLACK
ACCESSORY SOCKET
SW1
SW2 GROUND
SW3 STANDBY
F1 3 AMP
PL1
TO FILAMENTS
60 V RMS
320 V RMS
PH204
+440V
434V
470 10W
4700Ω 1W R27
R27 10K
+350V
R29 470 10W
180Ω 30W
8Ω
1.5K
NOTE
1) ALL CAPACITANCES IN mfd UNLESS OTHERWISE SPEC'D
2) ALL RESISTORS ½W 10%
3) VOLTAGE MEASURED WITH 11 megohm V.T.V.M. WITH:
a) LINE VOLTAGE 117 V
b) ALL CONTROLS AT MINIMUM
c) NO SIGNAL
d) ALL VOLTAGES +0% -20%
YORKVILLE SOUND LTD.
YBA-1
BASS MASTER
latest Version

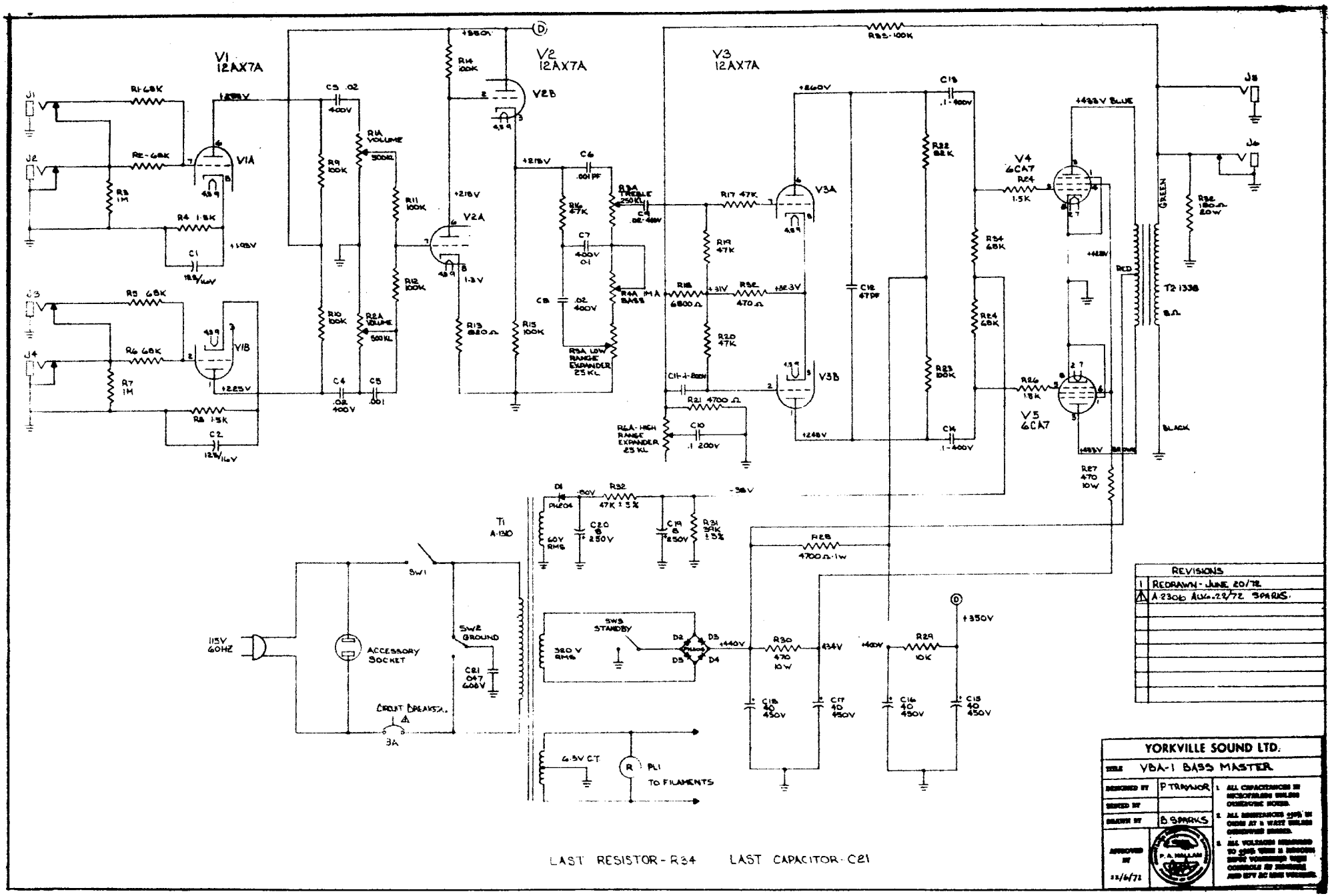

REVISIONS	
1	REDRAWN - JUNE 20/72
2	A 2306 AUG. 22/72 SPARKS.

YORKVILLE SOUND LTD.

TITLE: VBA-1 BASS MASTER

DESIGNED BY	P TRAWNOR
TRACED BY	
DRAWN BY	B SPARKS
APPROVED BY	P. A. HILLAN
22/6/72	

1. ALL CAPACITANCES IN MICROFARADS UNLESS OTHERWISE NOTED.
2. ALL RESISTANCES 5% IN OHMS AT 1 WATT UNLESS OTHERWISE NOTED.
3. ALL VOLTAGES REFERRED TO 5MΩ VOM 1 SENSITIVITY INPUT VOLTAGES WITH CONTROLS IN MAXIMUM AND SPY 20 LINE VOLTAGES.

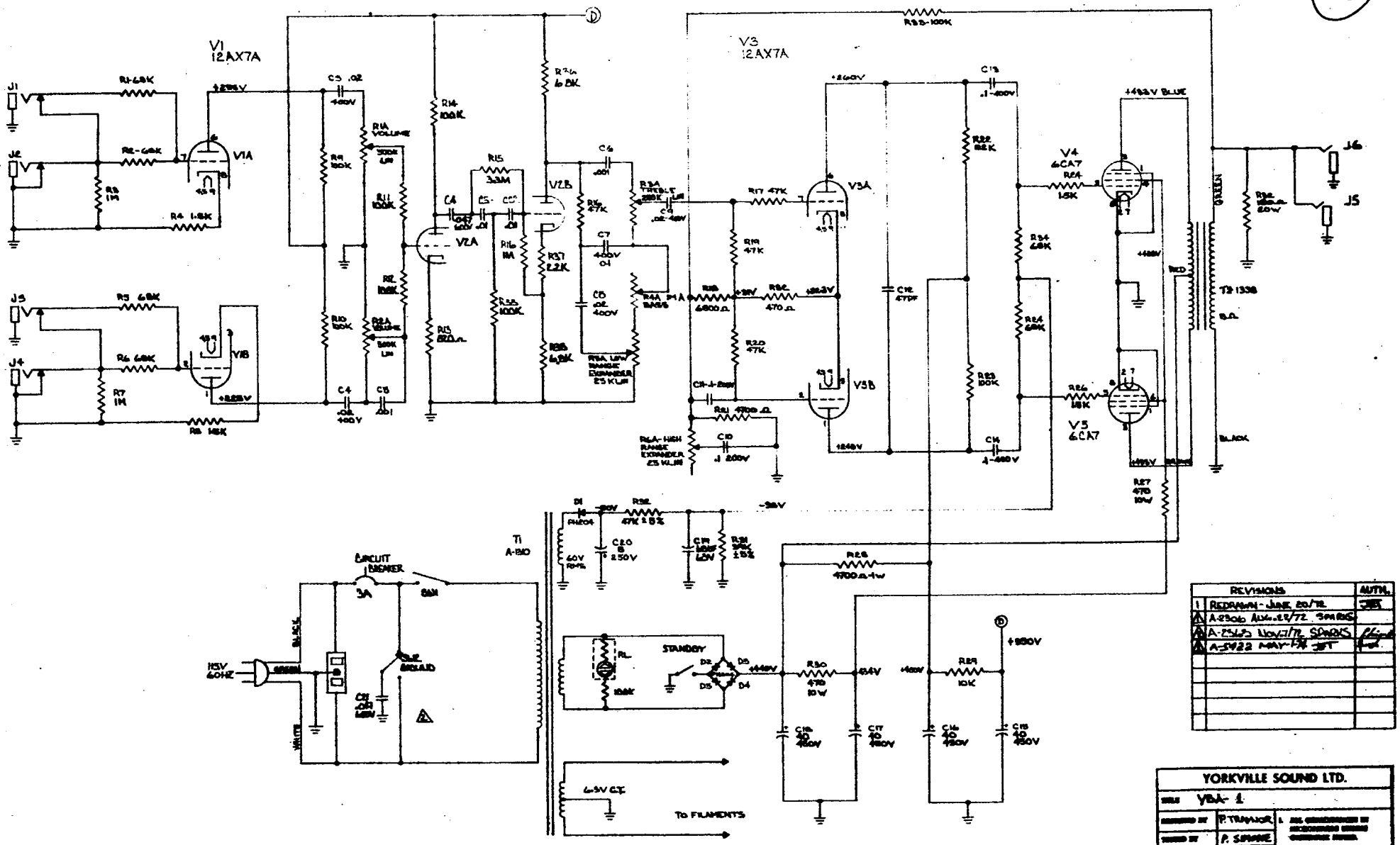

REVISIONS		AUTH.
1	REDRAWN - JUNE 20/72	
2	A-2306 AUG. 22/72 SPARKS	
3	A-2543 NOV. 3/72 SPARKS	
4	A-2422 MAY 1/73	

YORKVILLE SOUND LTD.

TITLE VSA-1

DESIGNED BY	P. TRAVNOR	
DRAWN BY	P. SPRUNE	
CHECKED BY	B. SPARKS	
APPROVED BY 12/6/72	P.A. MILLER	

LAST RESISTOR - R38 LAST CAPACITOR - C22